Ginlong Technologies Co., Ltd.
No. 57 Jintong Road, Binhai Industrial Park, Xiangshan, Ningbo,
Zhejiang, 315712, P.R.China.
Tel: +86 (0)574 6578 1806
Email:info@ginlong.com
Web: www.solisinverters.com

Please adhere to the actual products in case of any discrepancies in this user manual.

If you encounter any problem on the inverter, please find out the inverter S/N and contact us, we will try to respond to your question ASAP.

Solis Three Phase Inverter

S6-GU3P(275-350)K06-EV-ND Installation and Operation Manual

Ver 1.1

Ginlong Technologies Co., Ltd.

Contents

1. Introduction 4
    1.1 Product Description 4
    1.2 Unpacking and storage 5
        1.2.1 Storage 6
2. Safety instructions 7
    2.1 Safety symbols 7
    2.2 General safety instructions 7
    2.3 Notice for use 8
    2.4 Notice for Disposal 8
3. Installation 9
    3.1 Environmental considerations 9
        3.1.1 Select a location for the inverter 9
        3.1.2 Other environmental considerations 10
    3.2 Product handling 11
    3.3 Mounting the Inverter 12
        3.3.1 Metal rack mounting 13
        3.3.2 Wall mounting 14
    3.4 Electrical Connections 14
        3.4.1 Connect grounding wire of inverter enclosure 15
        3.4.2 Connect PV side of inverter 17
        3.4.3 Connect grid side of inverter 19
4. Communication & Monitoring 25
    4.1 RS485 and PLC communication connection 25
5. Start and Shutdown 29
    5.1 Pre-commissioning Inspection 29
    5.2 Power-on Procedure 29
    5.3 Shutdown procedure 30
6. Normal operation 31
    6.1 APP Download 31
    6.2 Log in the APP via bluetooth 31
    6.3 Home Page 33
    6.4 Info Page 34
    6.5 Alarm Page 34
    6.6 Setting Page 35
    6.7 Anti-PID Function 36
    6.8 Night SVG 37
7. Maintenance 38
    7.1 External Fan Maintenance 38
    7.2 Routine maintenance 39
8. Troubleshooting 40
9. Specifications 43

1.1 Product Description

Solis three phase inverters convert DC power from the photovoltaic(PV) array into alternating current(AC) power and feed into the power grid.
This manual covers the three phase inverter model listed below:
S6-GU3P275K06-EV-ND, S6-GU3P300K06-EV-ND, S6-GU3P333K06-EV-ND, S6-GU3P350K06-EV-ND

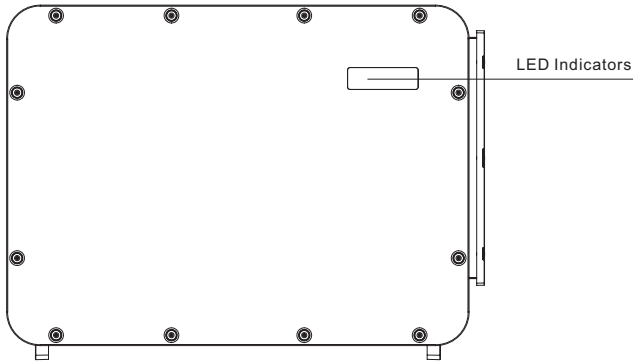

Figure 1.1 Front view

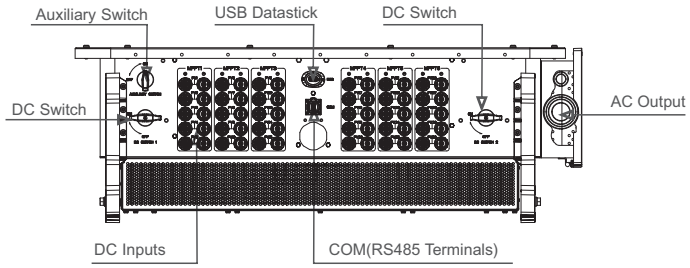

Figure 1.2 Bottom view

1.2 Unpacking and storage

The inverter ships with all accessories in one carton.
When unpacking, please verify all the parts listed below are included:

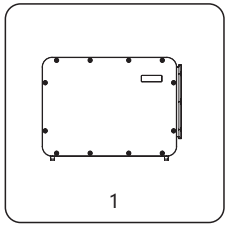

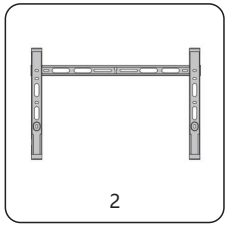

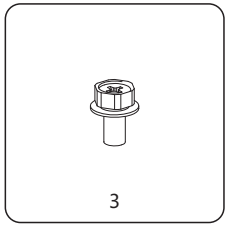

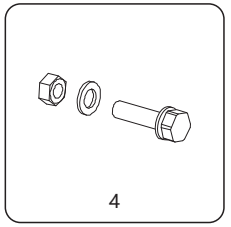

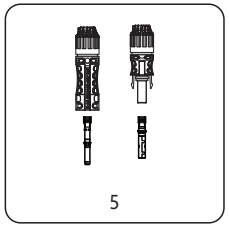

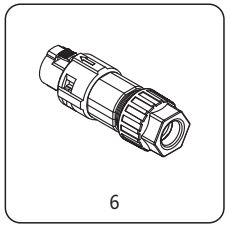

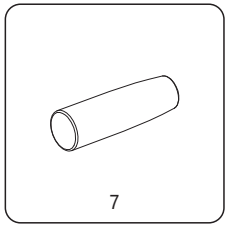

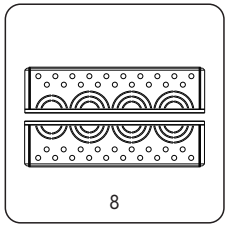

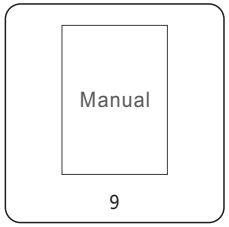

Part #	Description	Number	Remarks
1	Inverter	1	
2	Mounting Bracket	1	
3	Fastening screw	1	Hexagon bolt M6*12
4	Fastening screw, hex nut and flat gasket	4	Hexagon bolt M10*40
5	DC connector	24/30	24 for275K. 30 for (300-350)K
6	8 pin COM terminals	1	
7	Handle	4	
8	4 hole sealed rubber ring	1	
9	User manual	1	

Inverter packing list

1.2.1 Storage

If the inverter is not installed immediately, storage instructions and environmental conditions are below:

- Use the original box to repackage the inverter, seal with adhesive tape with the desiccant inside the box.
- Store the inverter in a clean and dry place, free of dust and dirt. The storage temperature must be between -40 - 70℃ and humidity should be between 0 to 95%, non-condensing.
- Do not stack more than 4 inverters.
- Keep the box(es) away from corrosive materials to avoid damage to the inverter enclosure.
- Inspect the packaging regularly. If packing is damaged (wet, pest damages, etc.), repack the inverter immediately.
- Store inverters on a flat, hard surface -- not inclined or upside down.
- After 100 days of storage, the inverter and carton must be inspected for physical damage before installing. If stored for more than 1 year, the inverter needs to be fully examined and tested by qualified service or electrical personnel before using.
- Restarting after a long period of non-use requires the equipment be inspected and, in some cases, the removal of oxidation and dust that has settled inside the equipment will be required.

Improper use may result in electric shock hazards or burns. This product manual contains important instructions that are required to be followed during installation and maintenance. Please read these instructions carefully before use and keep them in an easily locatable place for future reference.

2.1 Safety symbols

Safety symbols used in this manual, which highlight potential safety risks and important safety information, are listed below:



WARNING
Symbol indicates important safety instructions, which if not correctly followed, could result in serious injury or death.



NOTE
Symbol indicates important safety instructions, which if not correctly followed, could result in damage to or the destruction of the inverter.



CAUTION, RISK OF ELECTRIC SHOCK
Symbol indicates important safety instructions, which if not correctly followed, could result in electric shock



CAUTION, HOT SURFACE
Symbol indicates safety instructions, which if not correctly followed, could result in burns.

2.2 General safety instructions



WARNING
Do not connect PV array positive (+) or negative (-) to ground – doing so could cause serious damage to the inverter.



WARNING
Electrical installations must be done in accordance with local and national electrical safety standards.



WARNING
To reduce the risk of fire, branch circuit over-current protective devices (OCPD) are required for circuits connected to the Inverter.



CAUTION
The PV array (solar panels) supplies a DC voltage when exposed to light.

2. Safety Instructions

CAUTION

Risk of electric shock from energy stored in the inverter's capacitors. Do not remove cover until 5 minutes after disconnecting all sources of supply have passed, and this can only be done by a service technician. The warranty may be voided if any unauthorized removal of cover occurs.

CAUTION

The inverter's surface temperature can reach up to 70℃ . To avoid risk of burns, do not touch the surface when the inverter is operating. Inverter must be installed out of the reach of children.

WARNING

The inverter can only accept a PV array as a DC input. Using any other type of DC source could damage the inverter.

2.3 Notice for use

The inverter has been constructed according to applicable safety and technical guidelines. Use the inverter in installations that meet the following requirements ONLY:

1). The inverter must be permanently installed.
2). The electrical installation must meet all the applicable regulations and standards.
3). The inverter must be installed according to the instructions stated in this manual.
4). The system design must meet inverter specifications.
5). The inverter can only be used for industrial applications.

2.4 Notice for Disposal

This product shall not be disposed of with household waste. They should be segregated and brought to an appropriate collection point to enable recycling and avoid potential impacts on the environment and human health. Local rules in waste management shall be respected .



3. Installation

3.1 Environmental considerations

3.1.1 Select a location for the inverter

When selecting a location for the inverter, consider the following:

WARNING: Risk of fire

Despite careful construction, electrical devices can cause fires.

- Do not install the inverter in areas containing highly flammable materials or gases.
- Do not install the inverter in potentially explosive atmospheres.
- The mounting structure where the inverter is installed must be fireproof.

- The temperature of the inverter heat-sink can reach 70℃.
- The inverter is designed to work in an ambient temperature range between -30 to 60℃.
- When single inverter is installed, a minimum clearance shall be kept according to Figure 3.1.
- When multiple inverters are installed, a minimum clearance shall be kept according to Figure 3.2. Maintain at least 1000mm clearance at the front of the inverter.
- The LED indicator light located on the inverter's front panel should not be blocked.
- Adequate ventilation must be present if the inverter is to be installed in a confined space.
- Stacking up and down vertically is not recommended.

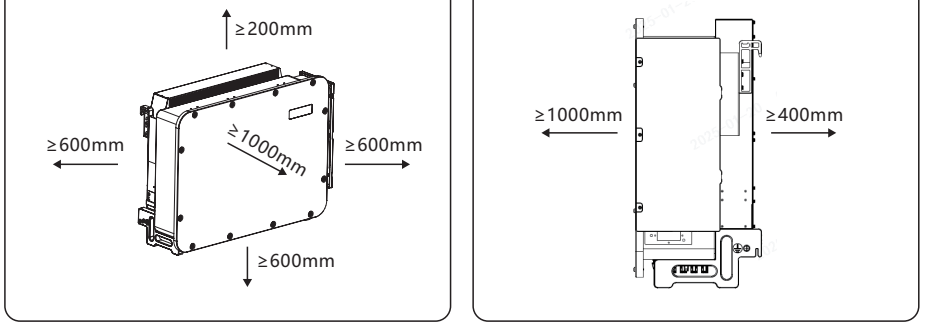

Figure 3.1 Distance required for single inverter

NOTE

Nothing should be stored on or placed against the inverter.

3. Installation

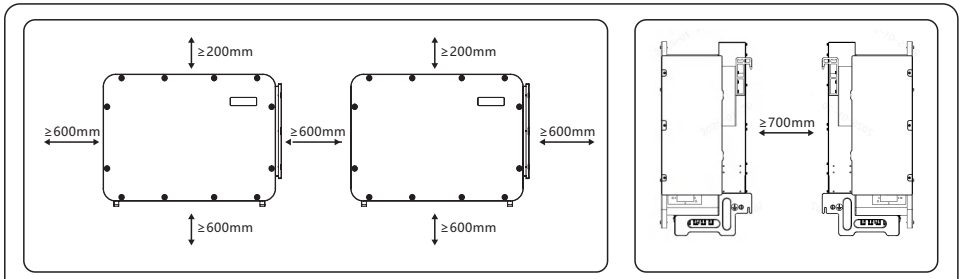

Figure 3.2 Distance required between multiple inverters

3.1.1.1 Examples of correct and incorrect installations

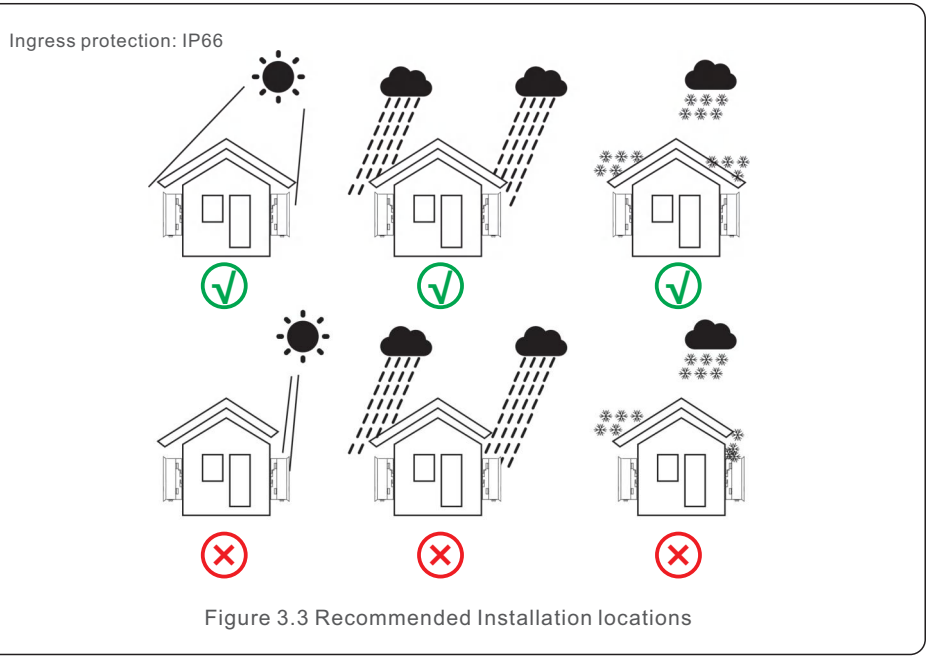

Figure 3.3 Recommended Installation locations

3.1.2 Other environmental considerations

3.1.2.1 Consult technical data

Consult the specifications section (section 10) for additional environmental conditions (protection rating, temperature, humidity, altitude, etc.).

3.1.2.2 Avoiding direct sunlight

Installation of the inverter in a location exposed to direct sunlight should to be avoided.

Direct exposure to sunlight could cause:

- Power output limitation (with a resulting decreased energy production by the system).
- Premature wear of the electrical/electromechanical components.
- Premature wear of the mechanical components (gaskets) and user interface.

3.1.2.3 Air circulation

Do not install in small, closed rooms where air cannot freely circulate. To prevent overheating, always ensure that the air flow around the inverter is not blocked.

3.1.2.4 Flammable substances

Do not install near flammable substances. Maintain a minimum distance of three (3) meters (10 feet) from such substances.

3.1.2.5 Living area

Do not install in a living area where the prolonged presence of people or animals is expected. Depending on where the inverter is installed (for example: the type of surface around the inverter, the general properties of the room, etc.) and the quality of the electricity supply, the sound level from the inverter can be quite high.

3.2 Product handling

Please review the instruction below for handling the inverter:

1. The red circles below denote cutouts on the product package.
   Push in the cutouts to form handles for moving the inverter weight around 119kg.

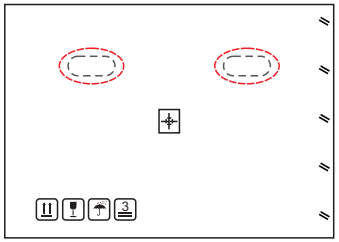

Figure 3.4 Handles used to move the inverter shown circled in red

2. Two people are required to remove the inverter from the shipping box. Use the handles integrated into the heat sink to remove the inverter from the carton (see Figure 3.5).

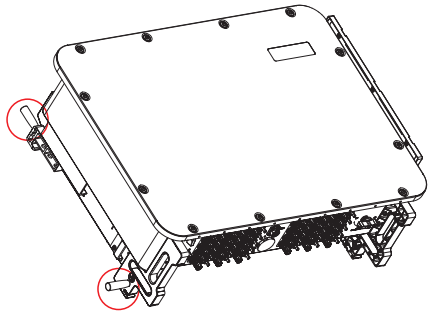

Figure 3.5 Inverter handles

WARNING

Due to the weight of the inverter, contusions or bone fractures could occur when incorrectly lifting and mounting the inverter. When mounting the inverter, take the weight of the inverter into consideration. Use a suitable lifting technique when mounting. When installers are carrying the inverter, please use 4 handles to secure safety. Lifting force of each handle shall not exceed 1.5 times of the inverter weight.

In case of using hoisting to lift the inverter, fix the hoisting cable to the hanger shown in the graph. Please make a reasonable selection of hoisting equipment considering the inverter weight of 117kg.

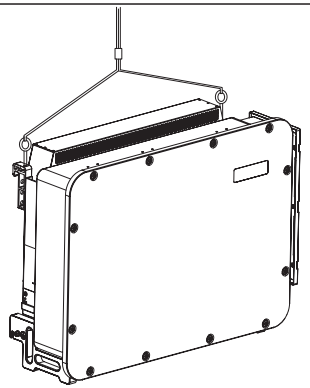

Figure 3.6 Hoisting sketch

3.3 Mounting the Inverter

The inverter can be mounted to the metal racking or the wall.

3.3.1 Metal rack mounting

The steps to mount the inverter are listed below.

1. Refer to Figure 3.7, drill holes for mounting screws based on the hole diameter of bracket, using a precision drill and keeping the drill perpendicular.
2. Make sure the bracket is horizontal, and the mounting holes are marked correctly. Drill the holes at your marks.
3. Use the M10 mounting screws to attach the bracket.
4. Lift the inverter and hang it on the bracket, and then slide down to make sure they match perfectly.

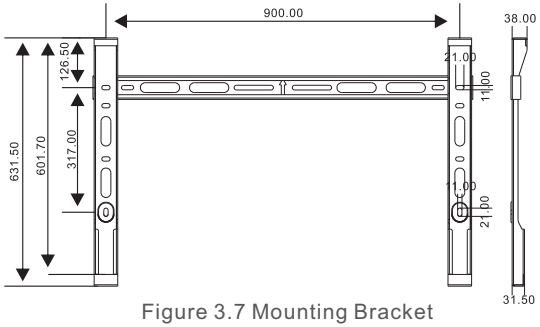

Figure 3.7 Mounting Bracket

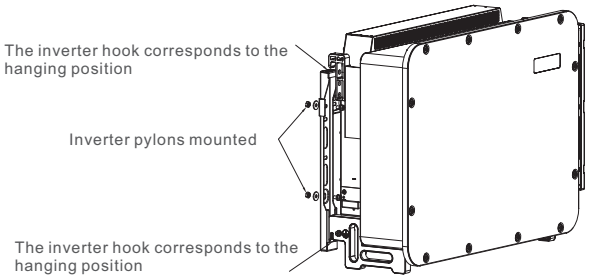

Figure 3.8 Installing the inverter

3.4 Electrical Connections

Inverter design uses PV style quick-connect terminal. The top cover needn't be opened during DC electrical connection. All electrical connections are suitable for local or national standard. If need 10mm^2 DC terminal, please contact sales representative.

Parts	Connection	Cable size	Torque	Cable outside diameter	Bolt Size
DC terminal	PV strings	Standard:4-6mm^2 Optional:10mm^2	NA	4.0-7.0mm	NA
Inverter enclosure grounding terminal	Enclosure Ground	≥S/2	10-12N.m	NA	M10
Grid terminal	AC cables(L1,L2,L3)	S:95-400mm²	20-30N.m	40-75mm	M12
PE terminal	PE	≥S/2	12-16N.m	22-32mm	M10
COM Port	Communication cable	0.5-1.5mm²	0.6N.m	⩽4-11mm	NA
USB Port	Wi-Fi/Cellular stick	NA	NA	NA	NA

Table 3.1 Electrical connection symbols

3. Installation

Before the electrical connection, make sure the following operations are completed.

1. Switch the Grid Supply Main Switch (AC) to OFF position.
2. Switch the Auxiliary Switch, DC Switch 1, DC Switch 2 to OFF position.

3.4.1 Connect grounding wire of inverter enclosure

To effectively protect the inverter, two grounding methods must be performed.
Connect the AC grounding cable (Please refer to section 3.4.3)
Connect the inverter enclosure case grounding on the heat sink, please follow the steps below:

1) Prepare the grounding cable: recommend to use the outdoor copper-core cable. The grounding wire should be at least half size of the hot wires.

2) Prepare OT terminals: M10.

Important:
For multiple inverters in parallel , all inverters should be connected to the same ground point to eliminate the possibility of a voltage potential existing between inverter grounds.

3) Strip the ground cable insulation to a suitable length.

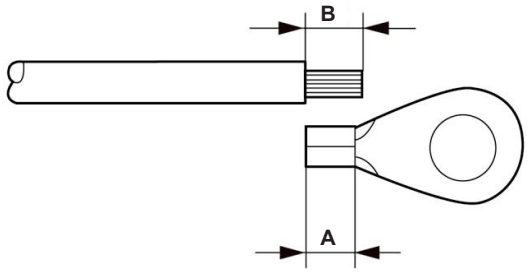

Figure 3.10 Strip the wire

Important:
B (insulation stripping length) is 2mm~3mm longer than A (OT cable terminal crimping area) .

4) Insert the stripped wire into the OT terminal crimping area and use the hydraulic clamp to crimp the terminal to the wire.

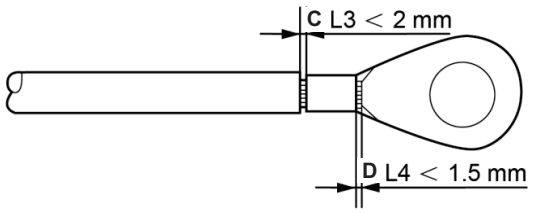

Figure 3.11 Assemble the terminal

Important:
After crimping the terminal to the wire, inspect the connection to ensure the terminal is solidly crimped to the wire.

5) Remove the screw from the heat sink ground point. There are 2 grounding points located at each side of heat sink, either one can be used for grounding.

6) Connect the grounding cable to the grounding point on the heat sink, and tighten the grounding screw, Torque is 10-12Nm.

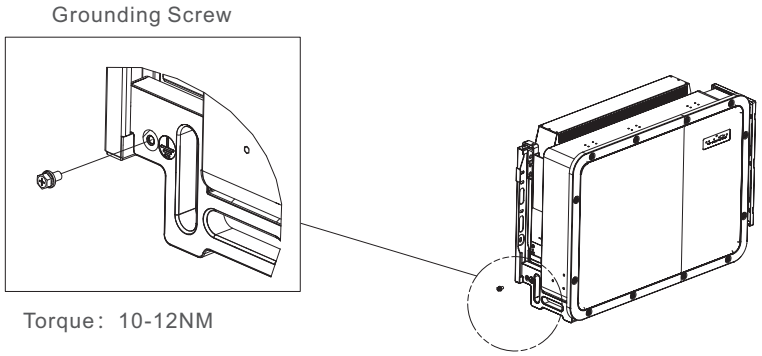

Figure 3.12 Connect the external grounding wire

Important:
For improving anti-corrosion performance,
after ground cable installed, apply silicone or paint.

3.4.2 Connect PV side of inverter

WARNING
Before connecting the inverter, make sure the PV array open circuit voltage is within the limit of the inverter. Otherwise, the inverter could be damaged.

WARNING
DO NOT connect the PV array positive or PV array negative cable to ground. This can cause serious damage to the inverter!

WARNING
MAKE SURE the polarity of the PV array output conductors matches the DC- and DC+ terminal labels before connecting these conductors to the terminals of the inverter.

WARNING
Please use the original DC MC4 terminals, other brands DC connectors may cause damages to the inverter.

WARNING
Please make sure the DC cables comply with the industry standard.

IMPORTANT:
The inverter has a DC fuseless design with internal overcurrent protection. It is not needed to install any external DC string fuses or DC circuit breakers. If customers want to have redundant protection, they can choose to install external DC overcurrent protection devices with 1.5~2.4 times of the string Impp. External DC overcurrent protection devices shall comply with IEC/EN 60269-6.

Please see table 3.1 for acceptable wire size for DC connections.Wire must be copper only.

The steps to assemble the DC connectors are listed as follows:

1. Strip off the DC wire for about 7mm, Disassemble the connector cap nut.
2. Insert the wire into the connector cap nut and contact pin.



Figure 3.13 Disassemble the Connector Cap nut

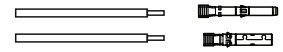

Figure 3.14 Insert the Wire into the Connector Cap nut and contact pin

3. Crimp the contact pin to the wire using a proper wire crimper.
4. Insert metal connector into top of connector, and tighten nut with torque 3-4 Nm.

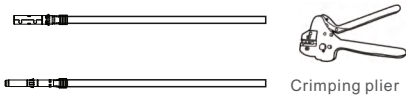

Figure 3.15 Crimp the contact pin to the wire

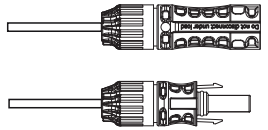

Figure 3.16 Connector with Cap nut Screwed on

5. Measure PV voltage of DC input with multimeter, verify DC input cable polarity (see figure 3.17), and ensure each string voltage is in range of inverter operation. Connect DC connector with inverter until hearing a slight clicking sound indicating successful connection. (see figure 3.18)

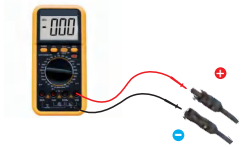

Figure 3.17 Multimeter measurement

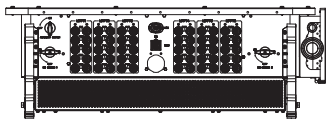

Figure 3.18 Connect the DC Connectors to the Inverter

CAUTION:

If DC inputs are accidently reversely connected or inverter is faulty or not working properly or DC switch can not trip automatically, direct manual turning off the DC switch is not allowed. Otherwise it may cause DC arc and damage the inverter or even lead to a fire disaster. The correct actions are:

*Use a clip-on ammeter to measure the DC string current.

*If it is above 0.5A, please wait for the solar irradiance reduces until the current decreases to below 0.5A.

*Only after the current is below 0.5A, you are allowed to turn off the DC switches and disconnect the PV strings.

* In order to completely eliminate the possibility of failure, please disconnect the PV strings after turning off the DC switch to avoid secondary failures due to continuous PV energy on the next day.

Please note that any damages due to wrong operations are not covered in the device warranty.

Requirements for the PV modules per MPPT input:

- All PV modules must be of the same type and power rating.
- Please ensure the PV strings are evenly connected to the inverter and try to utilize all the MPPT trackers.
- All PV modules must be aligned and tilted identically.
- The open-circuit voltage of the PV array must never exceed the maximum input voltage of the inverter, even at the coldest expected temperature. (see section 10 “Specifications” for input current and voltage requirements)
- Each string connected to a single MPPT must consist of the same number of series-connected PV modules.

3.4.2.1 DC connection high voltage danger notice

CAUTION

RISK OF ELECTRIC SHOCK

Do not touch an energized DC conductor. There are high voltages present when PV modules are exposed to light causing a risk of death due to an electric shock from touching a DC conductor!

Only connect the DC cables from the PV module to the inverter as described in this manual.

CAUTION

POTENTIAL DAMAGE TO THE INVERTER DUE TO OVERVOLTAGE

The DC input voltage of the PV modules must not exceed the maximum rating of the inverter. (see section 10 “Specifications”)

Check the polarity and the open-circuit voltage of the PV strings before connecting the DC cables to the inverter.

Confirm proper string length and voltage range before connecting DC cable to the inverter.

3.4.3 Connect grid side of inverter

WARNING

An over-current protection device must be used between the inverter and the grid.

1). Connect the three (3) AC conductors to the three (3) AC terminals marked “L1”, “L2” and “L3”.Refer to local code and voltage drop tables to determine the appropriate wire size and type.

2). Connect the grounding conductor to the terminal marked “PE” (protective earth, the ground terminal).

Over-Current Protection Device (OCPD) for the AC side

To protect the inverter's AC connection line, we recommend installing a device for protection against over-current, with the following characteristics noted in Table 3.2

(The OCPD shall comply with IEC/EN60947-3):

NOTE

Use AL-CU transfer (bi-metallic) terminal, and it is also recommended to use anti-oxidant grease with aluminum cables and terminals.

Inverter	Rated voltage(V)	Max. output current (Amps)	Recommended Rated Current(A)
S6-GU3P275K06-EV-ND	800	198.5	315
S6-GU3P300K06-EV-ND	800	216.5	315
S6-GU3P333K06-EV-ND	800	240.3	350
S6-GU3P350K06-EV-ND	800	252.6	350/400

Table 3.2 Recommended Rated Current of AC Circuit Breaker

3.4.3.1 Connecting the inverter to the utility grid

All electrical installations must be carried out in accordance with the local standards.
The grid voltage must be within the permissible range. The exact operating range of the inverter is specified in section 10 “Specifications”. Please make sure the inverter is connected to a IT grid.

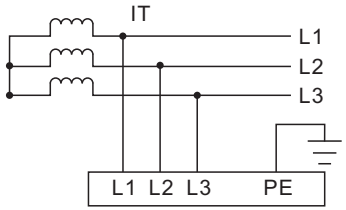

Figure 3.19 Supported grid type

3.4.3.2 Wiring procedure

CAUTION
RISK OF ELECTRIC SHOCK. Prior to starting the wiring procedure, ensure that the three-pole circuit breaker is switched off and cannot be reconnected.

NOTE
Don´t open the inverter cover, otherwise it can damage the inverter electronics due to moisture and dust intrusion.

CAUTION
Risk of fire if two conductors are connected to one terminal. If a connection of two conductors to a terminal is made, a fire can occur. NEVER CONNECT MORE THAN ONE CONDUCTOR PER TERMINAL.

NOTE
Use M12 crimp terminals to connect to the inverter AC terminals.

NOTE
Cable cross-section of ground wire should be more than half of live wire.

1. Strip the end of AC cable insulating jacket about 300mm then strip the end of each wire.

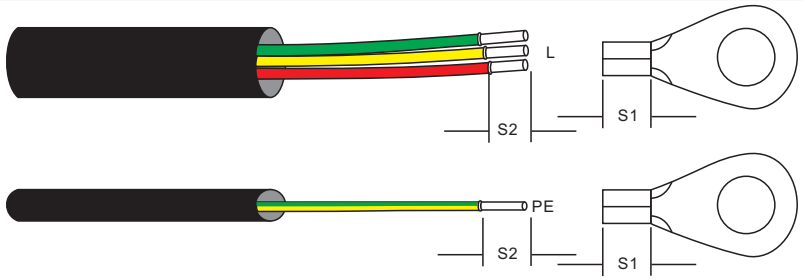

Figure 3.20 Strip AC cable

3. Installation

NOTE
S2 (insulation stripping length) is 2mm-3mm longer than S1.
(OT cable terminal crimping area)

2. Use a hydraulic crimp tool to crimp the terminal. The crimped portion of the terminal must be insulated with heat shrinkable tube or insulating tape.
3. Remove the 3 screws on the inverter junction box and remove the junction box cover.

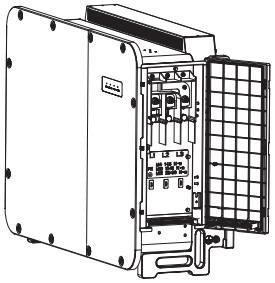

Figure 3.21 Open the AC wiring box

4. Select the matching cable protection pipe according to the AC cable diameter, thread the cable through the protection pipe, and use a socket wrench to connect the cable to the AC terminal strip in turn.
The protection pipe which covers the cable should extend into the box body, requiring an extension of more than 50mm. Finally, Use cable ties to fix the AC cables at the reserved three positions.

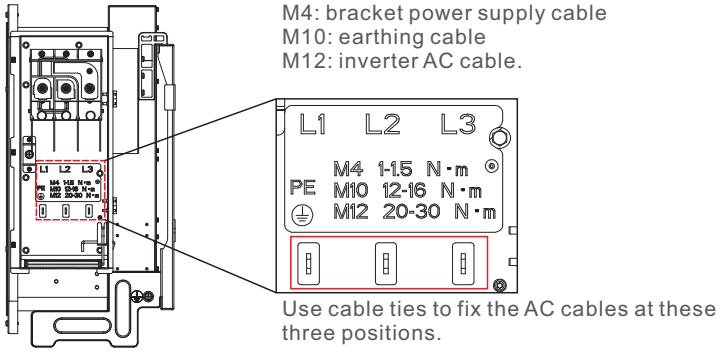

Figure 3.22 Connect the AC cable

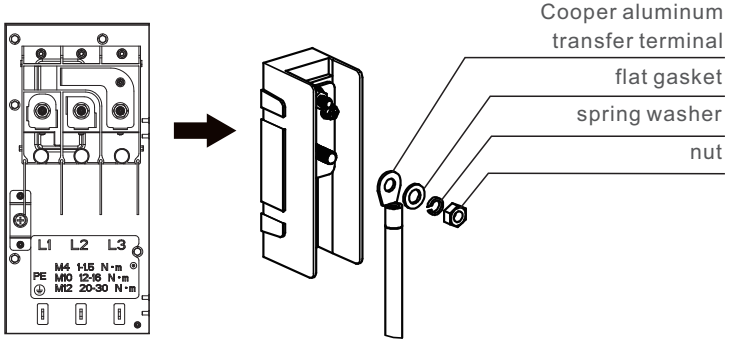

Figure 3.23 Aluminum alloy cable connection

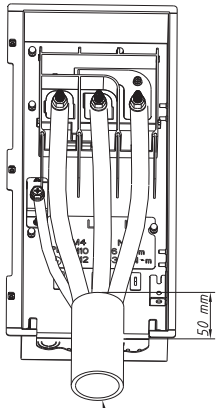

Figure 3.24 Adjust protection pipe position

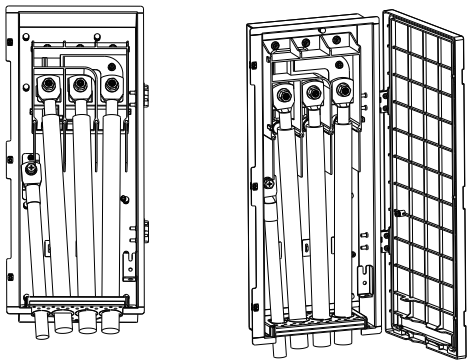

Figure 3.25 Single-core Cable Entry

NOTE

Make sure that there should be no holes, seam or gaps in the cable waterproof connector.

5. Close the junction box lid.

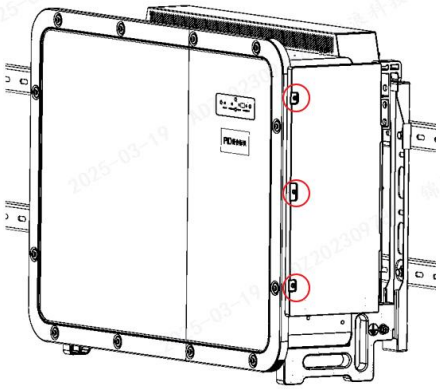



Figure 3.26 Close the AC Wiring Box

4.1 RS485 and PLC communication schematic

There are two communication ports on the bottom of the inverter.

USB port is for the data stick installation.

COM port is 8 Pin port for inverter daisy chain connection.

A maximum of 15 inverters can be monitored via RS-485 daisy-chain connection as below.

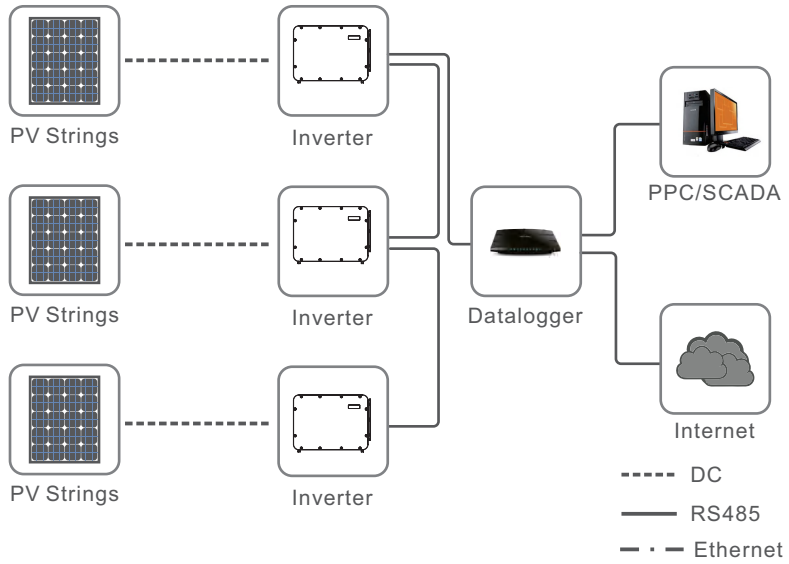

Figure 4.1 Multiple inverter monitoring system(RS485)

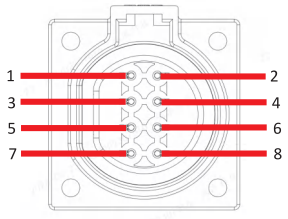

Serial number	Label	Definition	Illustrate
1	RS485_1_A1	RS485_A，RS485 Differential signals+	RS485 signal interface for cascading inverters and connecting data collectors
2	RS485_1_B1	RS485_B，RS485 Differential signals–	
3	RS485_1_A2	RS485_A，RS485 Differential signals+	RS485 signal interface for cascading inverters and connecting data collectors
4	RS485_1_B2	RS485_B，RS485 Differential signals–	
5	PGND	RS485 Shielded ground	RS485 Shielded ground
6	PGND	RS485 Shielded ground	
7	RS485_2_A	RS485_A，RS485 Differential signals+	Reserved
8	RS485_2_B	RS485_B，RS485 Differential signals–	

Figure 4.2 Communiation Port

4. Comm. & Monitoring

PLC is available for multiple inverter monitoring.

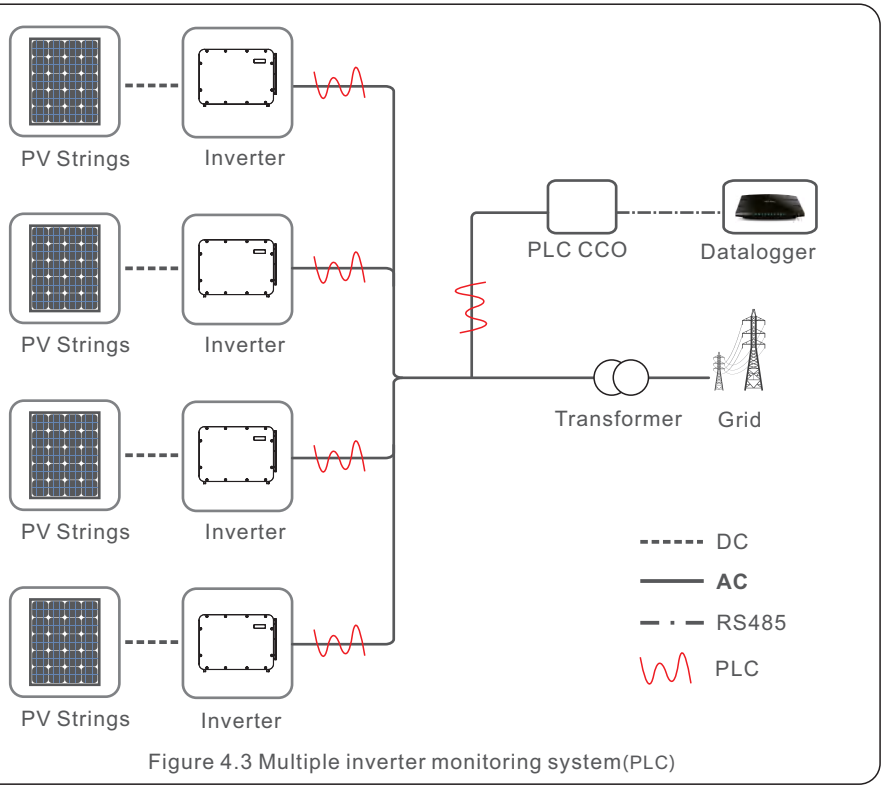

Figure 4.3 Multiple inverter monitoring system(PLC)

NOTE

1. Choose either RS485 or PLC for communication.
2. The maximum distance of PLC shall not exceed 1000m on overhead AC cables and 500m on buried AC cables.
3. The maximum distance of RS485 cable is 1000m, and the shield layer shall be grounded at a single point.

5. Start and Shutdown

5.1 Pre-commissioning Inspection

1. Check and confirm the inverter is securely installed.
2. Ensure sufficient ventilation space around the inverter.
3. Check that the grounding connection is reliable; refer to Section 3.4.1.
4. Check that DC wiring is correctly connected; ensure DC voltage is below 1500 V and polarity is correct. Refer to Section 3.4.2.
5. Check that AC wiring is correctly connected; ensure AC voltage and frequency meet inverter requirements. Refer to Section 3.4.3.
6. Check that communication cables are properly connected; refer to Section 3.4.4.
7. Check that all unused terminals are properly capped and sealed.
8. Check that warning signs and labels are affixed in prominent positions and securely attached.
9. Ensure no tools or debris are left inside or on top of the inverter.

5.2 Power-on Procedure

1. Complete all inspections listed in section 5.1.
2. After confirming PV3 string connection, set the AUX. SWITCH at the bottom of the inverter to ON. A click sound indicates the switch is fully closed. Observe the LED indicators.

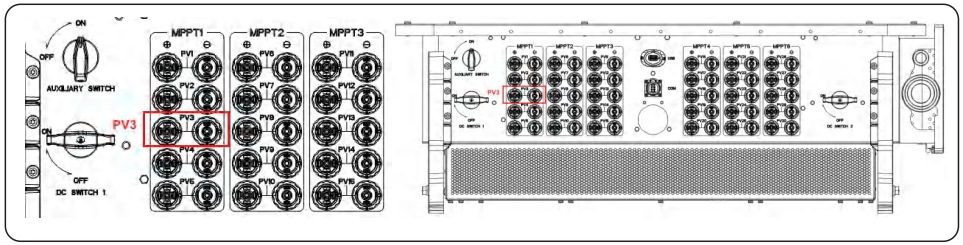

3. (1) If the POWER Led is steady red, set DC SWITCH 1 and DC SWITCH 2 to ON. Log into the APP via Bluetooth to check string voltage, string current and inverter alarms. Proceed to Step 4.
(2) If the POWER LED does not illuminate within 1 minute after closing AUX. SWITCH, DO NOT close DC SWITCH 1 or DC SWITCH 2. Immediately turn off AUX. SWITCH and check whether PV3 input cable is reverse-connected or input voltage meets the start-up requirement. After correction, repeat Step 2. If the POWER Led still does not turn on, turn off AUX. SWITCH and contact technical support.
4. (1) If string voltage and current are normal and only No Grid alarm exists, proceed to Step 5.
(2) If DC SWITCH 1 or DC SWITCH 2 trips automatically, troubleshoot according to APP alarm messages. After correction, repeat Step 3(1).
5. Set AUX. SWITCH to OFF.
6. Close the AC circuit breaker. After waiting 3–5 minutes, the inverter will automatically enter grid-tied power generation mode.

5. Start and Shutdown

NOTE

If DC SWITCH 1 and DC SWITCH 2 do not trip, but APP shows a negative PV string current, it means the open circuit voltage between the two strings of one MPPT is unbalanced. At this time, inverter could operate normally, but the power generation will be reduced because of this unbalanced voltage.
It is recommended manually turn off the corresponding DC SWITCH 1 or DC SWITCH 2, disconnect all PV strings on the abnormal MPPT, verify and ensure open-circuit voltage, module quantity, module type, orientation and tilt angle are consistent for each string. After correction, repeat Step 3(1).

CAUTION

The inverter's surface temperature can reach up to 70℃ (162⁰ F). To avoid risk of burns, do not touch the surface when the inverter is in the operational mode. Additionally, the inverter must be installed out of the reach of children.

5.3 Shutdown procedure

To stop the inverter, it is mandatory that the steps below are followed in the exact order outlined.
1. Turn off the inverter through "Power OFF" button on the APP.
2. Disconnect the AC Switch between Solis inverter and Grid.
3. Wait approximately 30 seconds (during this time, the AC side capacitors are dissipating energy).
If the inverter has DC voltage above the start-up threshold, the red POWER LED will be lit.
Turn the DC switches to OFF position.
4. Confirm all LED's switch OFF (~1 minute).

CAUTION

Although the inverter DC switch is in the OFF position and all the LED's are OFF, operators must wait 5 minutes after the DC power source has been disconnected before opening the inverter cabinet. DC side capacitors can take up to 5 minutes to dissipate all stored energy.

6. Normal operation

6.1 APP Download

Users need to download the APP before installing it for the first time.
There are three ways to download and install the latest APP:
1. You can visit **www.soliscloud.com** to download the latest version APP.
2. You can search "**Soliscloud**" in Google Play or App Store.
3. You can scan this QR code below to download "**Soliscloud**".

6.2 Log in the APP via bluetooth

Step 1: **Connect with Bluetooth.**
Turn on Bluetooth switch on your mobile phone and then open the Soliscloud APP.
Click "More Tools"->"Local Operation"->"Connect with Bluetooth"

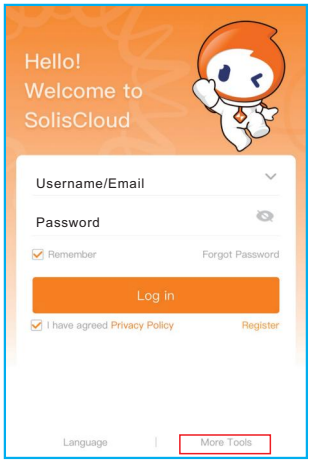

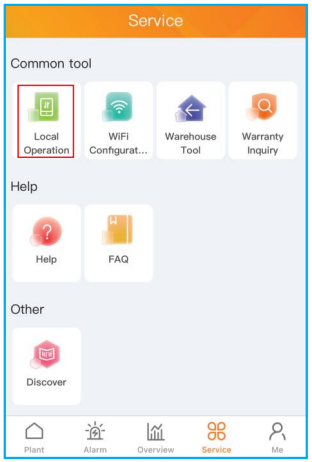

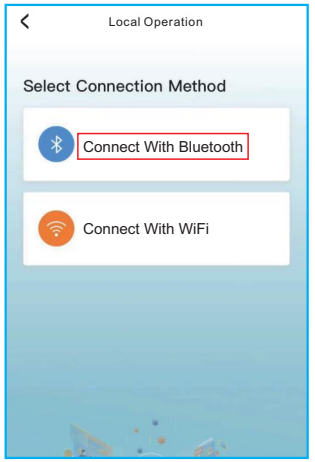

Step 2: Select the Bluetooth signal from the inverter. (Bluetooth Name: INV-Inverter SN)

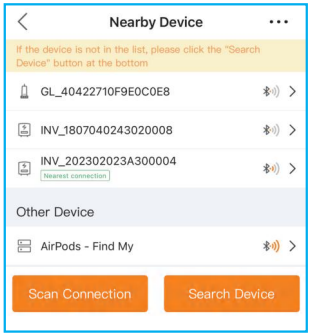

6. Normal operation

Step 3: **Login account.**
If you are the installer, please select the account type as Installer. If you are the plant owner, please select the account type as owner. Then set your own initial password for control verification. (The first log-in must be finished by installer in order to do the initial set up)

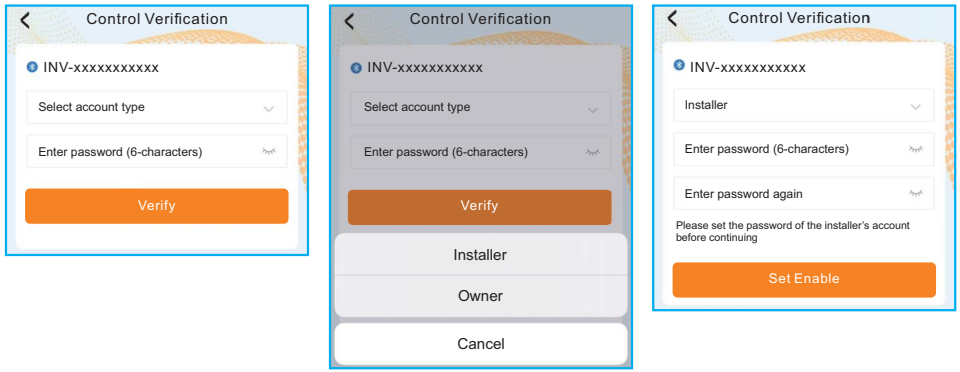

Step 4: Perform the setting configuration for Grid CodeSetting, etc.

Step 5: Switch on the AC breaker, wait till the inverter start generating.

The APP interface contains 4 sections:

1. Home
2. Info
3. Alarm
4. Settings

6.3 Home Page

The home page contains the power and energy data of the inverter.
The PV data and AC data are also available under this section.

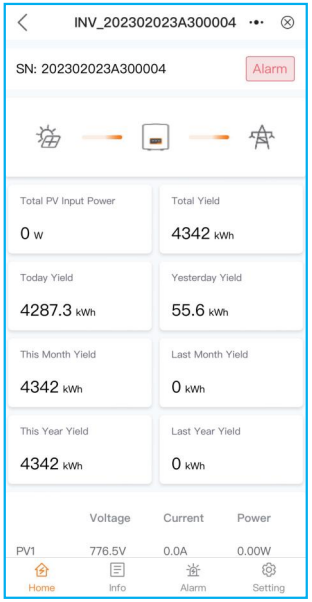

6.4 Info Page

Info page displays the general information of the inverter such as inverter serial number, firmware version, grid code, etc.

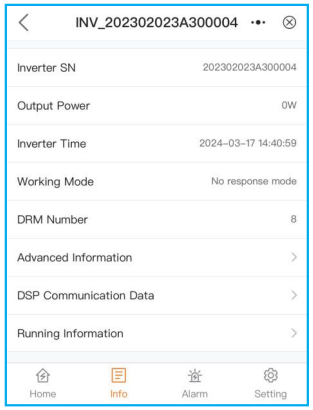

6.5 Alarm Page

Alarm page contains the alarm code of the inverter and its corresponding troubleshooting methods.

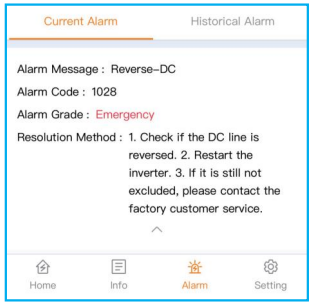

6. Normal operation

6.6 Setting Page

Setting page contains all the setting options of the inverter.

Functions	Setting Path
Switch on/off the inverter	Settings -> “Power ON” & ”Power OFF”
Change inverter time setting	Settings -> Inverter Setting-> Inverter Parameter Setting -> Inverter Time Setting
Change inverter output power percentage or power factor	Settings -> Inverter Setting-> Inverter Power Setting
Set grid code and protection parameters	Settings -> Grid Parameter Setting -> Grid Code Setting
Set Export Power control	Settings -> EPM Setting
Set grid code related working modes	Settings -> Inverter Work Mode Setting -> Work Mode

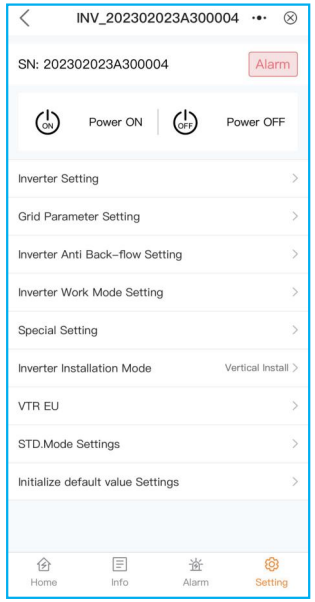

NOTE:
The inverter is by default setting with grid code which complies with local requirements. If there is need to modify the protection limits, please consult and approve by your local grid operator.

6.7 Anti-PID Function

The inverter integrates both daytime and nighttime Anti-PID function. Daytime Anti-PID can prevent PV module from degradation by increasing the PV negative to ground voltage. Nighttime Anti-PID(PID recovery) apply reverse voltage at night to restore PV module performance.

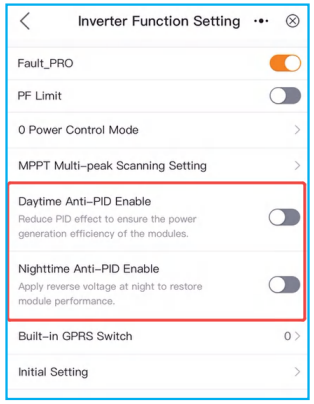

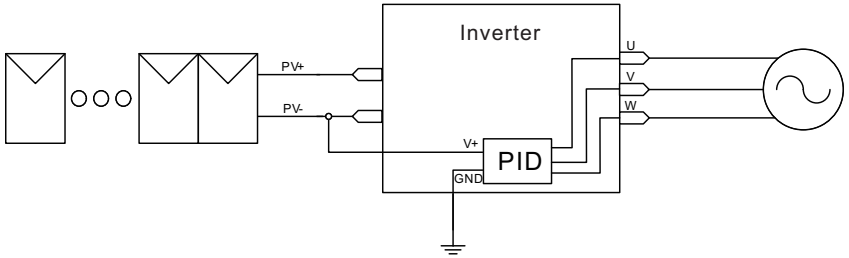

Figure 6.1 Anti-PID function

WARNING:

1. Anti PID only supports IT system transformers, and for neutral grounded transformers, the Anti PID function cannot be turned on.
2. If the anti PID function is turned on, the AC voltage per phase to ground will exceed 1KV. Please use a 1.8/3KV AC cable.
3. Daytime Anti-PID function must be operated together with S3-logger provided by Solis.

6. Normal operation

6.8 Night SVG

Inverter can output reactive power after this function is turned on, the range of reactive power can be set: -60%-60% rated power.

The setting step:

Step1. Inverter setting->Inverter function setting->Night SVG Switch.

Step2. Inverter setting->Inverter power setting->Night SVG Reactive power.

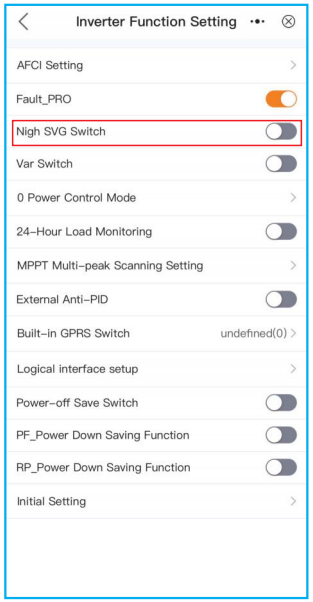

Step1

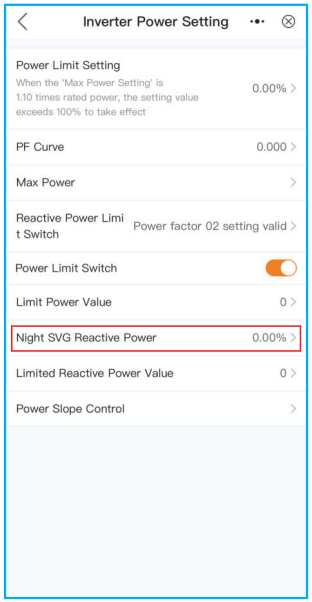

Step2

Solis Three Phase Inverter does not require any regular maintenance. However, cleaning the dust on heat-sink will help the inverter to dissipate the heat and increase its life time. The dust can be removed with a soft brush.

CAUTION:
Do not touch the inverter's surface when it is operating. Some parts of the inverter may be hot and cause burns. Turn off the inverter (refer to Section 5.2) and wait for a cool-down period before any maintenance or cleaning operation.

The LED status indicator lights can be cleaned with a damp cloth if they are too dirty to be read.

NOTE:
Never use any solvents, abrasives or corrosive materials to clean the inverter.

7.1 External Fan Maintenance

If the external fan does not work properly, the inverter will not be cooled effectively. and it may affect the effective operation of the inverter .
Therefore, it is necessary to clean or replace a broken fan as follows:

1. Turn off the inverter through "Power OFF" button on the APP.
2. Disconnect the AC power.
3. Turn the DC switches to "OFF" position.
4. Remove the 2 screws on the fan plate.
5. pull out the fan module slowly and unplug the power plug of the fan after pulling out around 500mm.
6. Clean or replace the external fan.
7. Connect the electrical wire and reinstall the fan. Restart the inverter.

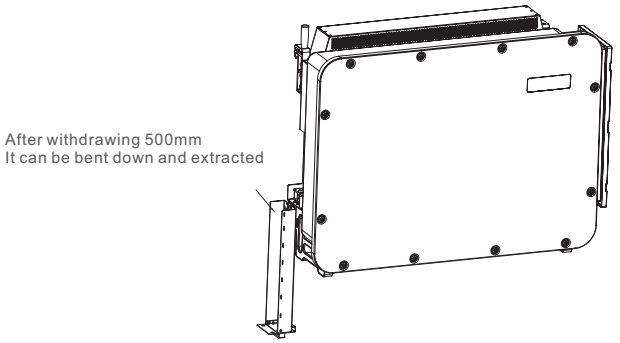

Figure 7.2 Replace the external fan

7. Maintenance

7.2 Routine maintenance

Maintenance Content	Inspection Method	Inspection Method	Maintenance Cycle
Status Check	View alarms via the Soliscloud APP system	Refer to 6.5	Routine
	Check whether all parameters of the inverter are set correctly	Refer to 6.6	
	Check whether the "AUXILIARY SWITCH" is in the "OFF" position	Set the auxiliary switch to the OFF position	
	Check whether the two DC switches are tripped	Please contact maintenance or R&D engineers to locate the problem before closing the switch	
Wearing Parts	Check whether the fan makes abnormal noise during operation	If there is foreign matter on the fan, it needs to be cleaned. Refer to the user maintenance manual	Quarterly
Environmental Inspection	Regularly check whether there is dust accumulation or foreign matter in the air inlet and outlet	Power off the inverter, clean up dust and foreign matter, and remove the air inlet baffle for cleaning if necessary	Quarterly
	Check whether the cable connection is loose or falling off, and whether the cable is damaged	Power off the inverter, fasten the loose or falling cables, or replace the cables	
	Check whether the sealing plugs of the unused DC input terminals are falling off	Install sealing plugs on unused DC input terminals	
	Check whether the grounding cable is reliably grounded. Use a multimeter to check whether the ground impedance at the inverter grounding screw is ≤4Ω	Tighten the screws on both sides of the grounding cable and confirm that the impedance meets the requirements	
	Check whether there are weeds around the inverter	Take the initiative to inspect and remove weeds before the dry grass season. Do not pile the removed weeds around the inverter after cleaning	Subject to the local dry grass season

8.1 Alarm Information and Troubleshooting

The inverter is designed in accordance with the most important international grid-tied standards and safety and electromagnetic compatibility requirements. Before delivering to the customer, the inverter has been subjected to several tests to ensure its optimal operation and reliability.

In case of failure, the yellow LED indicator will light up.

Please check the alarm information of the inverter through Solis APP or soliscloud.

The failure descriptions and their corresponding alarm messages are listed in Table 8.1:

Alarm Message	Failure description	Solution
No power	Inverter no power on LED	1.Check PV input connections 2.Check if the DC input voltage higher than 620V 3.Check if PV+/- is reversed
LED show initializing all the time	Can not start-up	1.Check if the connector on main board or power board are fixed. 2.Check if the DSP connector to power board are fixed.
OV-G-V01/02/03/04	Over grid voltage	1.Resistant of AC cable is too high. Change bigger size grid cable 2.Adjust the protection limit if it's allowed by electrical company.
UN-G-V01/02	Under grid voltage	1.Use user define function to adjust the protection limit if it's allowed by electrical company.
OV-G-F01/02	Over grid frequency	
UN-G-F01/02	Under grid frequency	
G-IMP	High grid impedance	
NO-GRID	No grid voltage	1.Check connections and grid switch. 2.Check the grid voltage inside inverter terminal.
OV-DC01/02/03/04	Over DC voltage	1.Reduce the module number in series
OV-BUS	Over DC bus voltage	1.Check inverter inductor connection 2.Check driver connection
UN-BUS01/02	Under DC bus voltage	
GRID-INTF01/02	Grid interference	1.Restart inverter 2.Change power board
OV-G-I	Over grid current	
IGBT-OV-I	Over IGBT current	
DC-INTF OV-DCA-I	DC input overcurrent	1.Restart inverter 2.Identify and remove the string to the fault MPPT 2.Change power board
IGFOL-F	Grid current tracking fail	1.Restart inverter or contact installer.
IG-AD	Grid current sampling fail	
OV-TEM	Over Temperature	1.Check inverter surrounding ventilation. 2.Check if there's sunshine direct on inverter in hot weather.

8. Troubleshooting

Alarm Message	Failure description	Solution
INI-FAULT	Initialization system fault	1.Restart inverter or contact installer.
DSP-B-FAULT	Comm. failure between main and slave DSP	
12Power-FAULT	12V power supply fault	
PV ISO-PRO 01/02	PV isolation protection	1.Remove all DC input, reconnect and restart inverter one by one. 2.Identify which string cause the fault and check the isolation of the string.
ILeak-PRO 01/02/03/04	Leakage current protection	1.Check AC and DC connection 2.Check inverter inside cable connection.
RelayChk-FAIL	Relay check fail	1.Restart inverter or contact installer.
DCinj-FAULT	High DC injection current	
Reve-DC	One of the DC string is reversely connected	1. Please check the inverters' PV string polarity, if there are strings reversely connected wait for the night when the solar irradiance is low and the PV string current down below 0.5A. Turn off the two DC switchs and fix the polarity issue.
Screen OFF with DC applied	Inverter internally damaged	1.Do not turn off the DC switches as it will damage the inverter. 2.Please wait for the solar irradiance reduces and confirm the string current is less than 0.5A with a clip-on ammeter and then turn off the DC switches. 3.Please note that any damages due to wrong operations are not covered in the device warranty.

Table 8.1 Fault message and description

8. Troubleshooting

8.2 Contact Information

NOTE

If the inverter displays any alarm message as listed in Table 8.1; please turn off the inverter (refer to Section 5.2) and wait for 15 minutes before restarting it (refer to Section 5.1). If the failure persists, please contact your local distributor or the service center.

Please keep ready with you the following information before contacting us.

1. Serial number of Solis Three Phase Inverter;
2. The distributor/dealer of Solis Three Phase Inverter (if available);
3. Installation date.
4. The description of problem (i.e. the status of the LED indicator lights. Other readings obtained from the APP (refer to Section 6.3-6.5) will also be helpful.);
5. The PV array configuration (e.g. number of panels, capacity of panels, number of strings, etc.);
6. Your contact details.

9. Specifications

Model	S6-GU3P275K06-EV-ND
Max. DC input voltage (Volts)	1500
Rated DC voltage (Volts)	1080
Start-up voltage (Volts)	500
MPPT voltage range (Volts)	480...1500
Max. input current (Amps)	6*70
Max short circuit input current (Amps)	6*105
MPPT number/Max input strings number	6/24
Rated output power (Watts)	275k
Rated grid voltage (Volts)	3/PE, 800
Grid voltage range (Volts)	640-920
Rated grid frequency (Hertz)	50/60
Grid frequency range (Hertz)	45-55/55-65
Max. output current (Amps)	198.5
Power Factor (at rated output power)	> 0.99 (0.8 leading - 0.8 lagging)
THDi (at rated output power)	<3%
Max.efficiency	99.0%
EU efficiency	98.7%
Dimensions (W*H*D)	1098*813*378.5mm
Weight	117kg
Topology	Transformerless
Self consumption (night)	< 3W
Operating ambient temperature range	-30℃...+60℃
Relative humidity	0~100%
Ingress protection	IP66
Cooling concept	Intelligent redundant cooling
Max.operation altitude	4000m
Grid connection standard	EN50549, G99, VDE0126, IEC61727, VDE4110, CEA 2019
Safty/EMC standard	IEC62109-1/-2,IEC61000-6-2/-4
DC connection	Matching connector
AC connection	OT Terminal (max 400 mm²)
Display	LED， Bluetooth+APP
Communication connections	RS485, Optional: PLC
Protective class	I
Max. inverter backfeed current to the array	0
Noise emission (typical)	≤80 dB(A)

9. Specifications

Model	S6-GU3P300K06-EV-ND
Max. DC input voltage (Volts)	1500
Rated DC voltage (Volts)	1080
Start-up voltage (Volts)	500
MPPT voltage range (Volts)	480...1500
Max. input current (Amps)	6*80
Max short circuit input current (Amps)	6*125
MPPT number/Max input strings number	6/30
Rated output power (Watts)	300k
Rated grid voltage (Volts)	3/PE, 800
Grid voltage range (Volts)	640-920
Rated grid frequency (Hertz)	50/60
Grid frequency range (Hertz)	45-55/55-65
Max. output current (Amps)	216.5
Power Factor (at rated output power)	> 0.99 (0.8 leading - 0.8 lagging)
THDi (at rated output power)	<3%
Max.efficiency	99.0%
EU efficiency	98.7%
Dimensions (W*H*D)	1098*813*378.5mm
Weight	119kg
Topology	Transformerless
Self consumption (night)	< 3W
Operating ambient temperature range	-30℃...+60℃
Relative humidity	0~100%
Ingress protection	IP66
Cooling concept	Intelligent redundant cooling
Max.operation altitude	4000m
Grid connection standard	EN50549, G99, VDE0126, IEC61727, VDE4110, CEA 2019
Safty/EMC standard	IEC62109-1/-2,IEC61000-6-2/-4
DC connection	Matching connector
AC connection	OT Terminal (max 400 mm²)
Display	LED， Bluetooth+APP
Communication connections	RS485, Optional: PLC
Protective class	I
Max. inverter backfeed current to the array	0
Noise emission (typical)	≤80 dB(A)

9. Specifications

Model	S6-GU3P333K06-EV-ND
Max. DC input voltage (Volts)	1500
Rated DC voltage (Volts)	1080
Start-up voltage (Volts)	500
MPPT voltage range (Volts)	480...1500
Max. input current (Amps)	6*80
Max short circuit input current (Amps)	6*125
MPPT number/Max input strings number	6/30
Rated output power (Watts)	333k
Rated grid voltage (Volts)	3/PE, 800
Grid voltage range (Volts)	640-920
Rated grid frequency (Hertz)	50/60
Grid frequency range (Hertz)	45-55/55-65
Max. output current (Amps)	240.3
Power Factor (at rated output power)	> 0.99 (0.8 leading - 0.8 lagging)
THDi (at rated output power)	<3%
Max.efficiency	99.0%
EU efficiency	98.7%
Dimensions (W*H*D)	1098*813*378.5mm
Weight	119kg
Topology	Transformerless
Self consumption (night)	< 3W
Operating ambient temperature range	-30℃...+60℃
Relative humidity	0~100%
Ingress protection	IP66
Cooling concept	Intelligent redundant cooling
Max.operation altitude	4000m
Grid connection standard	EN50549, G99, VDE0126, IEC61727, VDE4110, CEA 2019
Safty/EMC standard	IEC62109-1/-2,IEC61000-6-2/-4
DC connection	Matching connector
AC connection	OT Terminal (max 400 mm²)
Display	LED， Bluetooth+APP
Communication connections	RS485, Optional: PLC
Protective class	I
Max. inverter backfeed current to the array	0
Noise emission (typical)	≤80 dB(A)

9. Specifications

Model	S6-GU3P350K06-EV-ND
Max. DC input voltage (Volts)	1500
Rated DC voltage (Volts)	1080
Start-up voltage (Volts)	500
MPPT voltage range (Volts)	480...1500
Max. input current (Amps)	6*80
Max short circuit input current (Amps)	6*125
MPPT number/Max input strings number	6/30
Rated output power (Watts)	350k
Rated grid voltage (Volts)	3/PE, 800
Grid voltage range (Volts)	640-920
Rated grid frequency (Hertz)	50/60
Grid frequency range (Hertz)	45-55/55-65
Max. output current (Amps)	252.6
Power Factor (at rated output power)	> 0.99 (0.8 leading - 0.8 lagging)
THDi (at rated output power)	<3%
Max.efficiency	99.0%
EU efficiency	98.7%
Dimensions (W*H*D)	1098*813*378.5mm
Weight	119kg
Topology	Transformerless
Self consumption (night)	< 3W
Operating ambient temperature range	-30℃...+60℃
Relative humidity	0~100%
Ingress protection	IP66
Cooling concept	Intelligent redundant cooling
Max.operation altitude	4000m
Grid connection standard	EN50549, G99, VDE0126, IEC61727, VDE4110, CEA 2019
Safty/EMC standard	IEC62109-1/-2,IEC61000-6-2/-4
DC connection	Matching connector
AC connection	OT Terminal (max 400 mm²)
Display	LED， Bluetooth+APP
Communication connections	RS485, Optional: PLC
Protective class	I
Max. inverter backfeed current to the array	0
Noise emission (typical)	≤80 dB(A)
Maximum output fault current	800A@5us
Current (inrush)a.c. A (peak and duration)	23.4A@3ms